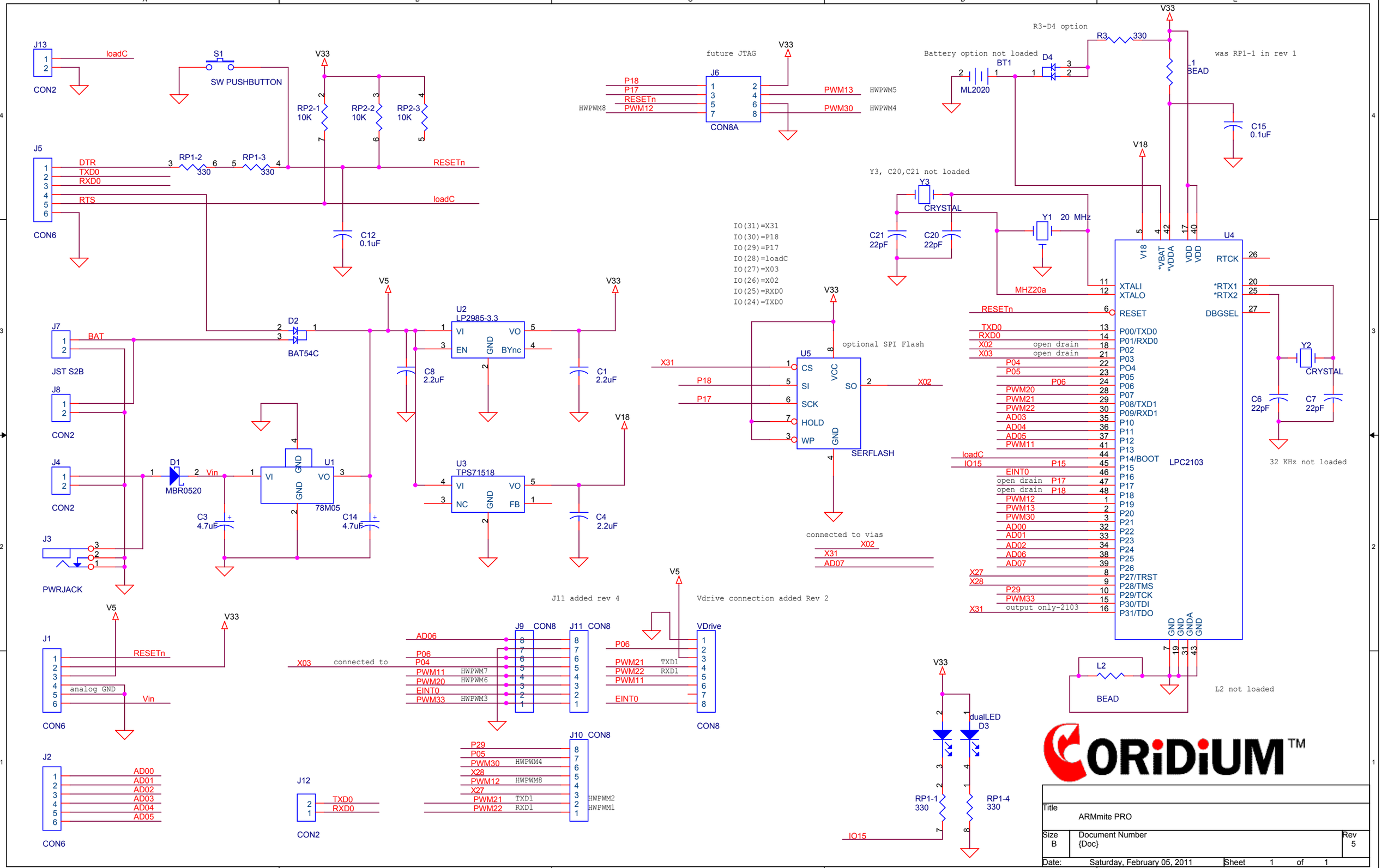
J13
CON2
loadC
S1
SW PUSHBUTTON
V33
RP2-1 10K
RP2-2 10K
RP2-3 10K
J5
CON6
DTR
TXD0
RXD0
RTS
RP1-2 330
RP1-3 330
RESETn
loadC
C12 0.1uF
future JTAG
J6
CON8A
P18
P17
RESETn
PWM12
HWPWM8
PWM13
PWM30
HWPWM5
HWPWM4
Battery option not loaded
BT1
ML2020
D4
R3-D4 option
R3 330
was RP1-1 in rev 1
BEAD
C15 0.1uF
Y3, C20,C21 not loaded
Y3
CRYSTAL
C21 22pF
C20 22pF
Y1 20 MHz
MHZ20a
IO(31)=X31
IO(30)=P18
IO(29)=P17
IO(28)=loadC
IO(27)=X03
IO(26)=X02
IO(25)=RXD0
IO(24)=TXD0
U4
LPC2103
V18
*VBAT
*VDDA
VDD
VDD
RTCK
XTALI
XTALO
RESET
DBGSEL
*RTX1
*RTX2
P00/TXD0
P01/RXD0
P02
P03
PO4
P05
P06
P07
P08/TXD1
P09/RXD1
P10
P11
P12
P13
P14/BOOT
P15
P16
P17
P18
P19
P20
P21
P22
P23
P24
P25
P26
P27/TRST
P28/TMS
P29/TCK
P30/TDI
P31/TDO
open drain
output only-2103
GND
GND
GNDA
GND
Y2
CRYSTAL
C6 22pF
C7 22pF
32 KHz not loaded
J7
JST S2B
BAT
D2
BAT54C
J8
CON2
J4
CON2
D1
MBR0520
Vin
U1
78M05
C3 4.7uF
C14 4.7uF
J3
PWRJACK
V5
U2
LP2985-3.3
VI
VO
EN
GND
BYnc
C8 2.2uF
C1 2.2uF
U3
TPS71518
NC
FB
C4 2.2uF
U5
SERFLASH
optional SPI Flash
CS
SI
SCK
HOLD
WP
SO
VCC
X31
X02
connected to vias
AD07
J11 added rev 4
Vdrive connection added Rev 2
J9 CON8
J11 CON8
VDrive
CON8
AD06
P06
P04
PWM11
PWM20
EINT0
PWM33
X03
connected to
HWPWM7
HWPWM6
HWPWM3
PWM21
PWM22
TXD1
RXD1
J10 CON8
P29
P05
PWM30
X28
PWM12
X27
HWPWM4
HWPWM8
HWPWM2
HWPWM1
J1
CON6
RESETn
analog GND
Vin
J2
CON6
AD00
AD01
AD02
AD03
AD04
AD05
J12
CON2
TXD0
RXD0
L2
BEAD
L2 not loaded
dualLED
D3
RP1-1 330
RP1-4 330
IO15
CORIDIUM™
Title
ARMmite PRO
Size
B
Document Number
{Doc}
Rev
5
Date:
Saturday, February 05, 2011
Sheet
1
of
1